MAINTENANCE TOOLS

Grip screws	
SAS 2 Grip HEX screw	3mm
SAS 2 Trigger guard HEX screw	2mm
SAS 2 Grip TORX screw	T15
SAS 2 Trigger guard TORX screw	T8
1911 Grip screw	T10
1911 Competition magwell	3mm
1911 Cesar magwell	4mm
Magazine catch extension button screw	3/32"
1911 Magwell	7/64"
Optic adapters	
SAS 2 TAC 4.25" & 5.0” cover plate	T8
SAS 2 TAC 4.25" & 5.0” optic adapter	T10
SAW, AIR & Radical 5.4” optic adapter	T10
AXE Cover plate	T10
Optic sights	
MS3 Mounting Screw	T8
MS2 Mounting Screw	T10
MS1 & B.A.O -1 Mounting Screw	T15
sights	
TAC 4.25" & 5.0” rear sight fixation screw	1/16"
Novak rear sight screw	2mm
Competition adjustable rear sight fixation screw	1.5mm
UL 3.25" adjustable rear sight (cover plate)	T10
SAW, AIR & Radical 5.4” adjustable rear sight (cover plate)	T10
Trigger adjustment screw	
Modular trigger over-travel screw	1.3mm
Non modular trigger over-travel screw	1.5mm

SCREWS

Screw Type	SKU	Head	Thread	OAL Length	
SAS 2 TAC RMR & SRO Sight Screw	SCRW/TAC-1	T10	6/32	9.8 mm	
SAS 2 TAC Holosun Sight Screw	-	-	6/32	-	The correct screws are provided with the optic.
AXE Tomahawk \ Hatchet RMR & SRO Sight Screw	SCRW/AXE-5	T10	4/40	9 mm	
AXE Slide Cover Plate Screw	SCRW/AXE-1	T10	4/40	5.5 mm	Will also fit Holosun 407c / 507c / 508T
AXE MS-3 Sight Screw	SCRW/AXE-2	T8	4/40	9.5 mm	
SAS 2 UL 3.25” MS1 Sight Screw	SCRW/STPL-3	T15	M4	10 mm	
SAS 2 UL 3.25" Holosun Sight Screw	SCRW/HOL-1	2.5 HEX	M4	11.6 mm	For Holosun 407k / 507k & EPS Carry (The correct screws are provided with the optic, use the short length ones)
SAS 2 Evo Mount Thumbrest Screw	SCRW/SAS-15	T15	M4	6.5 mm	
SAS 2 Evo Mount RTS-2 Footprint Screw	-	-	M4		
SAS 2 Evo Mount RMR Footprint Screw	-	-	6/32		(The RMR Footprint Adapter must be used)

SPRING DATA

Name	Caliber	Recoil Spring (lbs)	Mainspring (lbs)	Extra recoil springs in box
SAS 2 Ultralight 3.25"	9MM	16	15	
SAS 2 Ultralight 3.25" Comp	9MM	16	15	
SAS 2 SL / SAW / AIR	9MM	11	13	10/12
SAS 2 SL / SAW / AIR	0.40S&W	12	13	11/14
SAS 2 Radical 5.4"	9MM	9	13	7/10
SAS 2 Radical 5.4"	0.40S&W	10	13	9/12
SAS 2 TAC 4.25” / Comp / PRO	9MM	11	13	
SAS 2 TAC 5"	9MM	11	13	
SAS 2 UR	9MM/.38SUP	9	12	7/10
SAS 2 UR Shorty	9MM/.38SUP	9	12	7/10
SAS 2 UR-F	9MM/.38SUP	9	12	7/10
SAS 2 Bullesteros	9MM/.38SUP	9	12	8/9/10
SAS 2 Spike	9MM	11	15	
1911 Ultra	9MM	18	15	
1911 Ultra	45ACP	18	15	
1911 Commander	9MM	11	15	
1911 Commander	45ACP	14	15	
1911 Government - Bushing Barrel / Bull Barrel	9MM	11	15	
1911 Government - Bushing Barrel / Bull Barrel	45ACP	14	15	
1911 EDC 4.25"	9MM	11	15	
1911 EDC 4.25"	45ACP	14	15	
1911 EDC 5"	9MM	11	15	
1911 EDC 5"	45ACP	14	15	
1911 Hunter 6"	9MM	11	15	
1911 Hunter 6"	45ACP	12	15	
1911 Trophy - Bushing Barrel / Bull Barrel	9MM	10	13	9/11
1911 Trophy - Bushing Barrel / Bull Barrel	45ACP	12	13	11/14
1911 Racer - Bushing Barrel / Bull Barrel	9MM	10	13	9/11
1911 Racer - Bushing Barrel / Bull Barrel	0.40S&W	12	13	10/14
1911 Cesar - Bushing Barrel / Bull Barrel	9MM	10	13	9/11
Axe Tomahawk / Cleaver / Hatchet (C / FS)	9mm	16		

Holster compatibility

Speed holsters for USPSA & IPSC (all competition models):
-Double Alpha Academy
-CR Speed
-Ghost INC.
-Everglades (MRH)

Race Kydex holsters for USPSA & 3GUN:
-Priority 1 Holsters (TAC & SL models)
-Weber Tactical (TAC & SL models)

EDC and Duty Kydex holster (IWB & OWB):
-Tier 1 Concealed (TAC models, UL & UL-COMP)
-Priority 1 Holsters (TAC & UL models)
-QVO Tactical (UL-COMP)
-Deep Concealment Holsters (UL & UL-COMP)
-12/21 Designs (UL & UL-COMP)
-TR Holsters (TAC & SL models)
-Weber Tactical (TAC & SL models)

Holsters for Axe pistols:
-Priority 1 Holsters
-LAS Concealment
-Bravo Concealment
-TXC Holsters
-T Rex Arms
-Bladetech
-Tenicor
-Safariland
-Ghost INC.

-Most Glock holsters will accommodate the Axe, but open ended holsters work best.
-Weapon light holsters for Glocks will work 100% with the Axe & the specific light the holster was made for.

Please instruct customers to contact each company for specific questions in regards to fitment and pictures.

Links to all of the companies mentioned above:

www.doublealpha.biz
www.crspeed.co.za
www.ghostholsterdirect.com
www.priority1holsters.com
www.tier1concealed.com
https://webertactical.com/
www.qvotactical.com
www.deepconcealmentholsters.com
www.trholsters.com/
www.facebook.com/twelvetwentyonedesigns
www.evergladesammo.com/
www.tenicor.com
www.txcholsters.com
www.blade-tech.com
www.trex-arms.com
www.lasconcealment.com
www.safariland.com

Compatible with	Front sight	Rear sight	Dovetail Type
1911 Commander (2022) 1911 Government (2022) 1911 EDC 4.24" 1911 EDC 5"	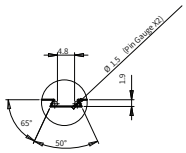	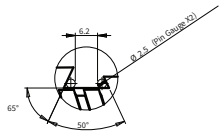	Novak Style Dovetail Front & Rear
1911 Hunter 6" 1911 Trophy 1911 Racer 1911 Cesar SAS2 SL SAS2 SL AIR SAS2 SL SAW SAS2 Radical 5.4"	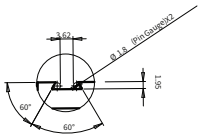	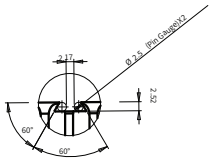	Standard Bul Dovetail Front & Rear
1911 Ultra	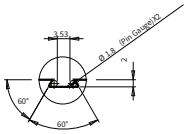	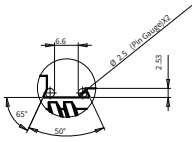	Standard Bul Ultra Dovetail Front & Rear
AXE C + FS Cleaver AXE C + FS Hatchet	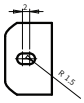	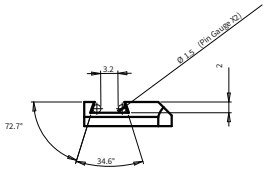	Glock Style Dovetail Front & Rear
AXE C + FS Tomahawk		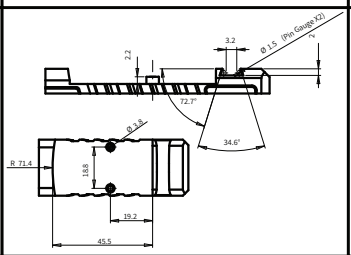	Glock Style Dovetail Front & Rear Optic Footprint: Trijicon RMR
SAS2 UL 3.25" SAS2 UL 3.25" Comp	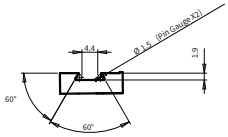	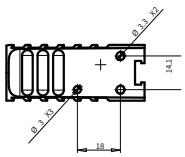	Standard Bul Ultra Dovetail Front Optic Footprint: Shield RMSc
SAS2 TAC 4.25" SAS2 TAC 5" SAS2 TAC 4.25" Comp	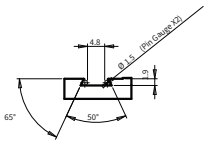	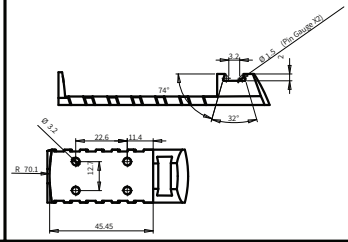	Novak Style Dovetail Front Glock Style Dovetail Rear Optic Footprint: Trijicon RMR
SAS2 UR SAS2 UR-F SAS2 UR Shorty SAS2 Bullesteros	N/A	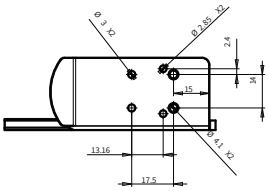	Optic Footprint: C-More RTS2

1911 TROPHY

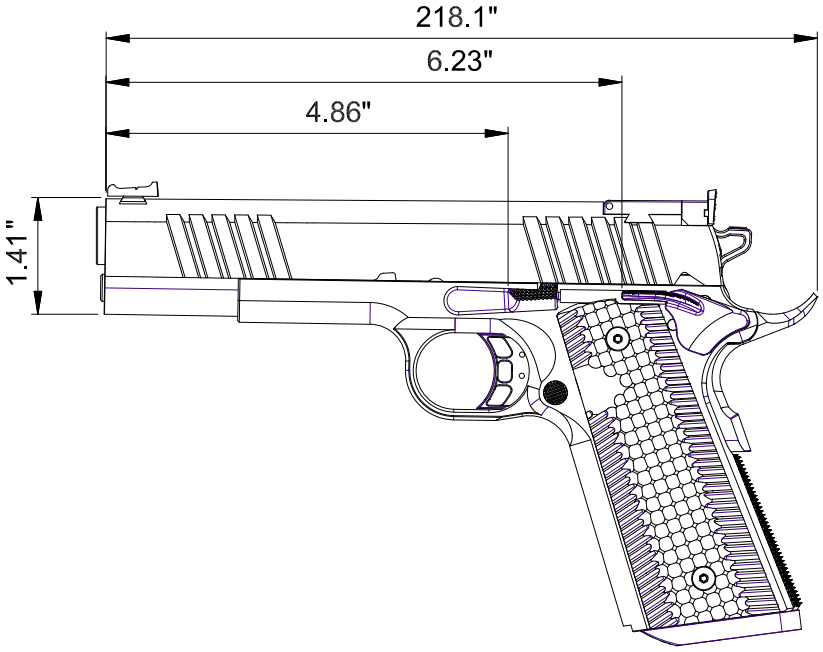

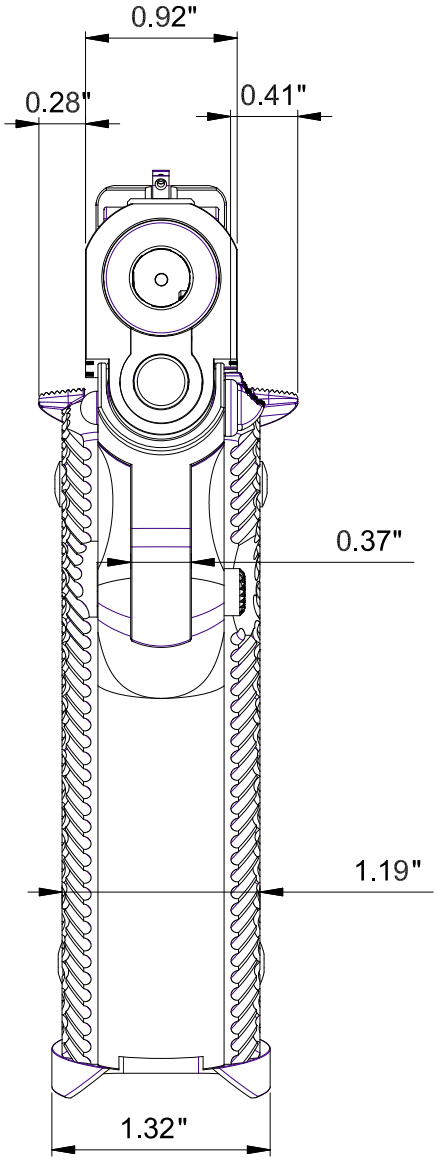

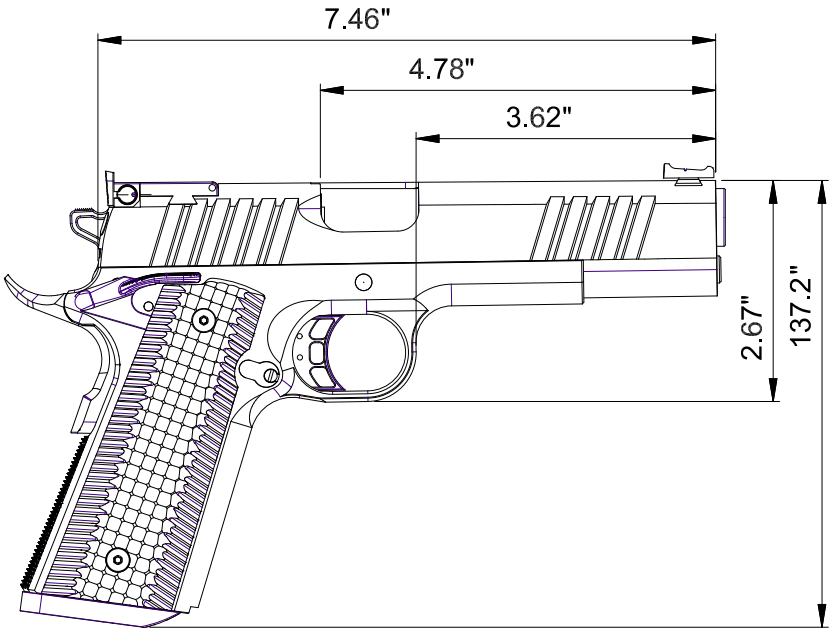

1911 EDC 4.25”

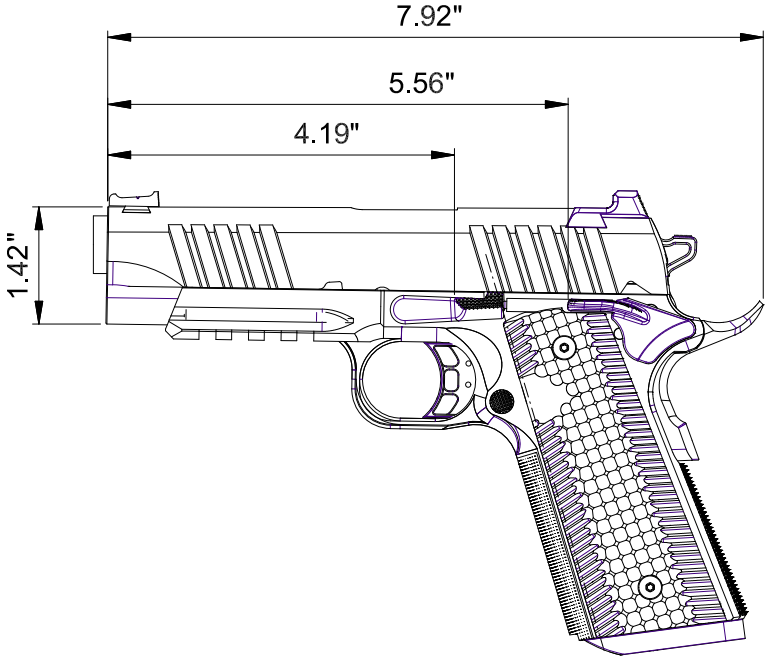

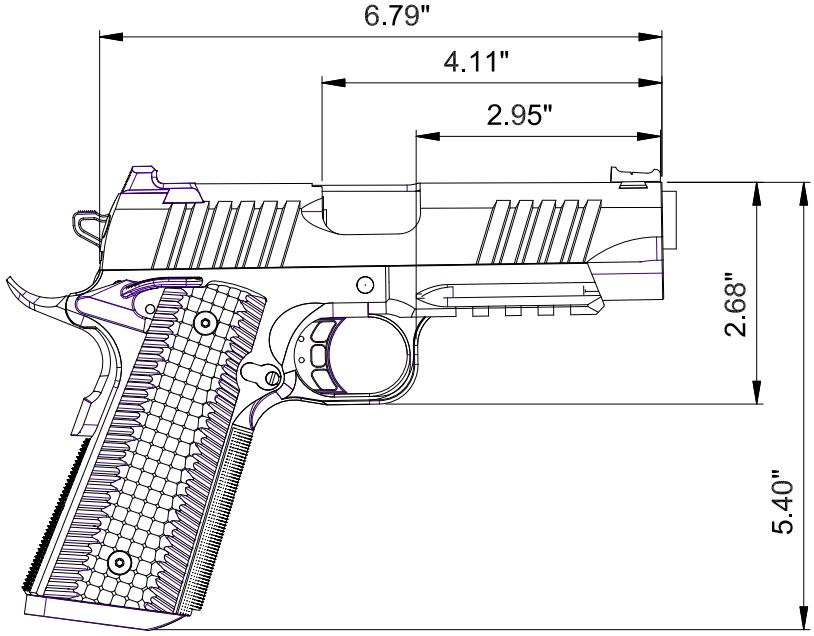

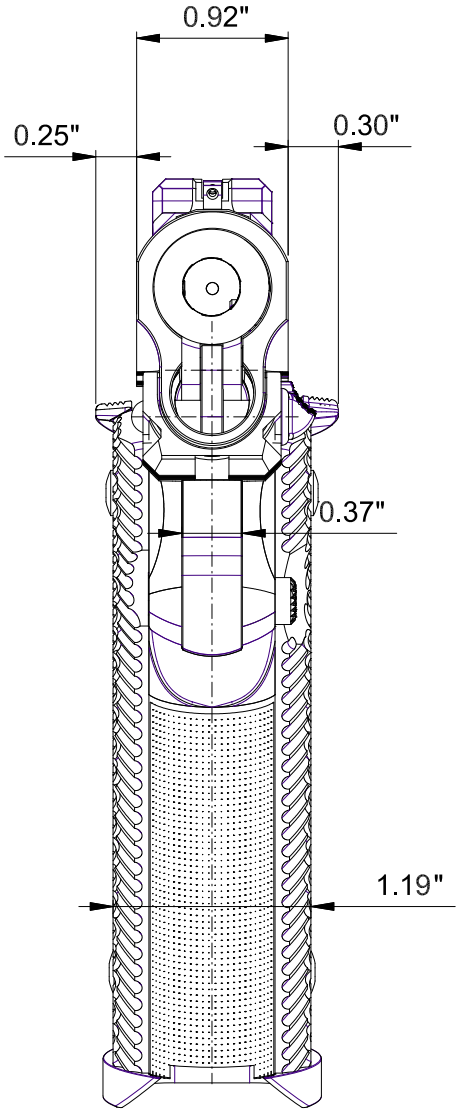

1911 EDC 5”

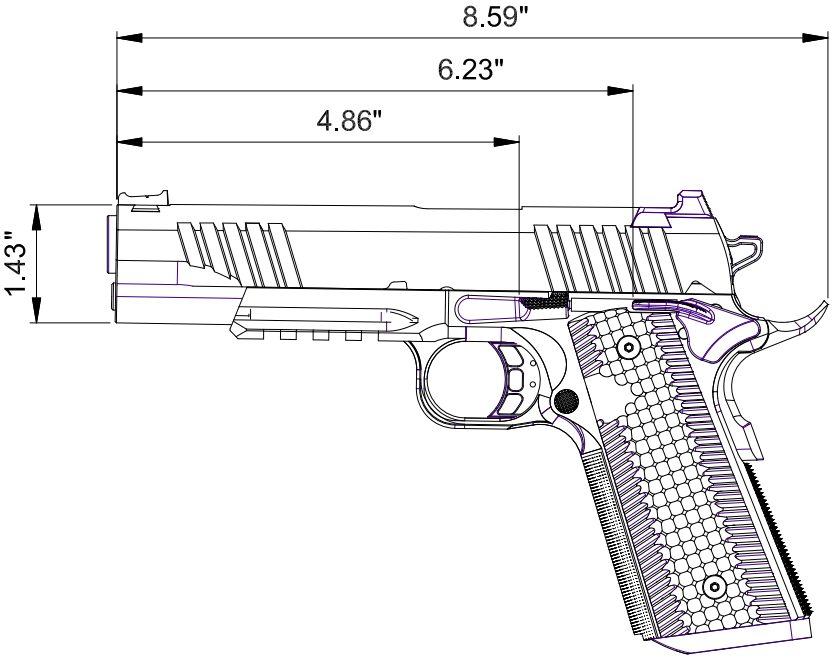

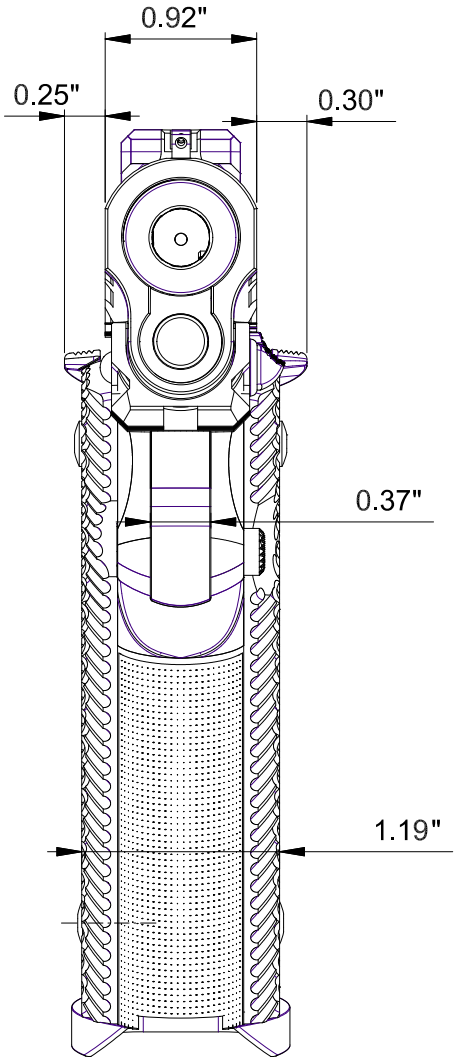

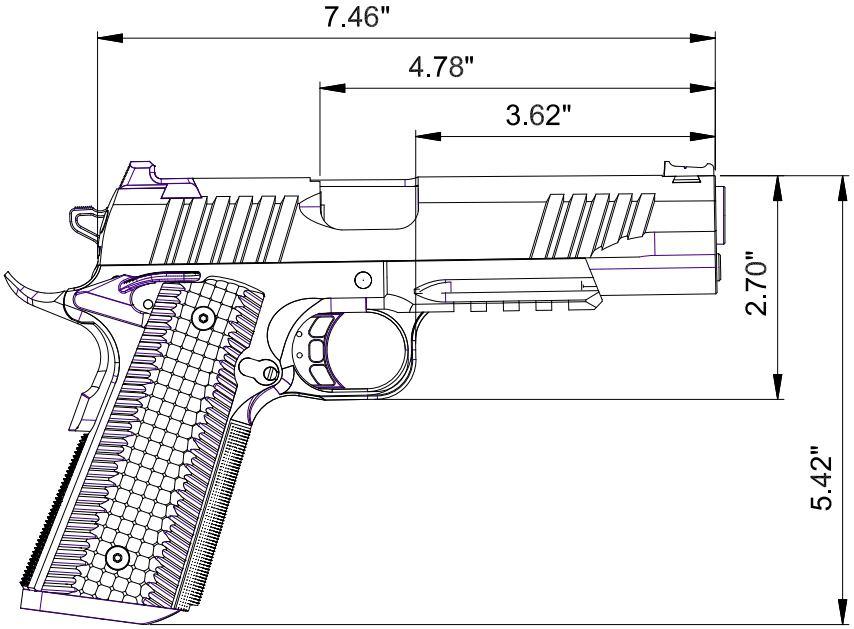

1911 GOVERNMENT

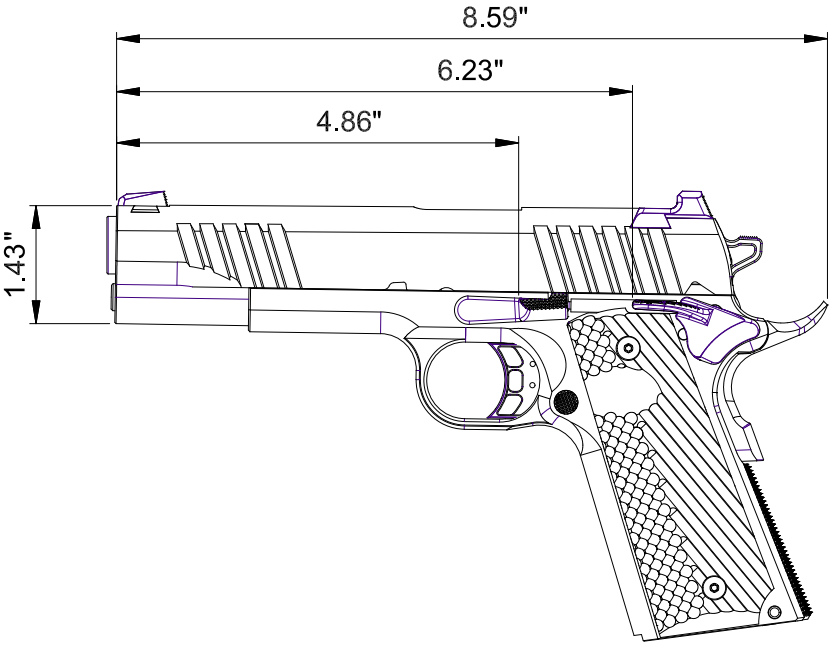

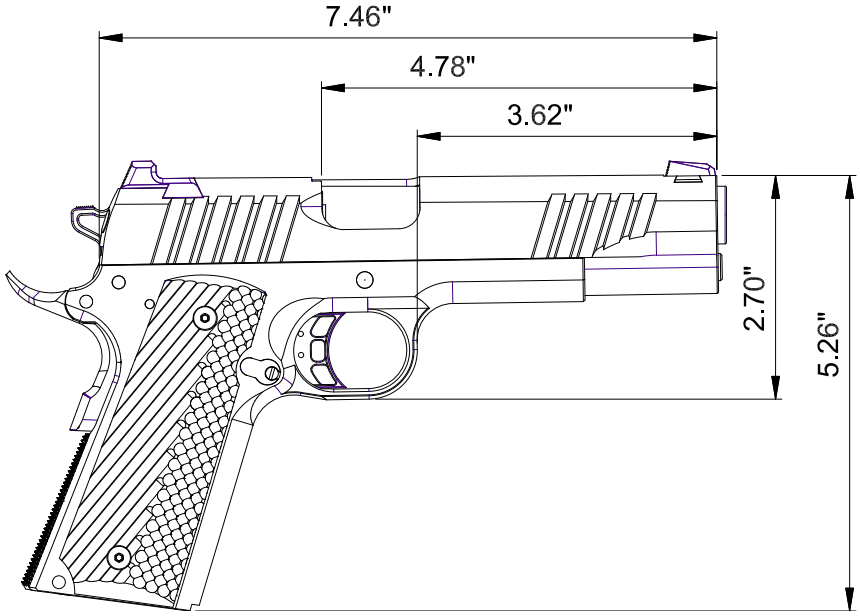

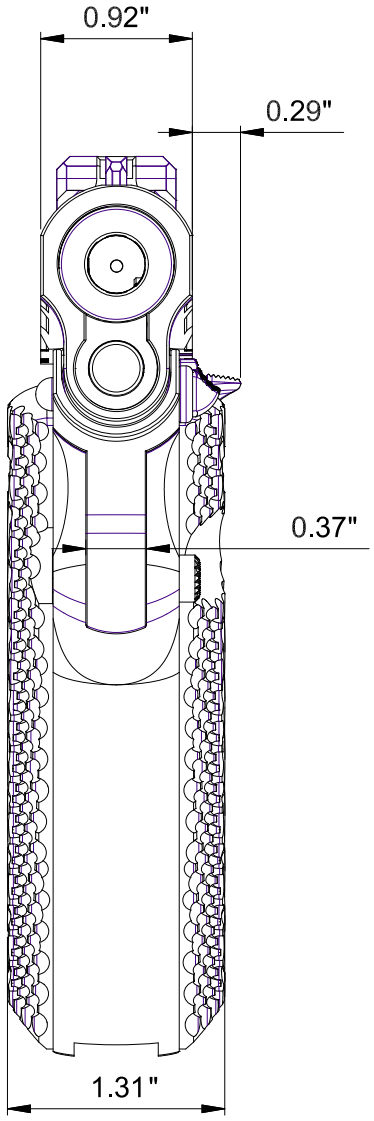

1911 COMMANDER

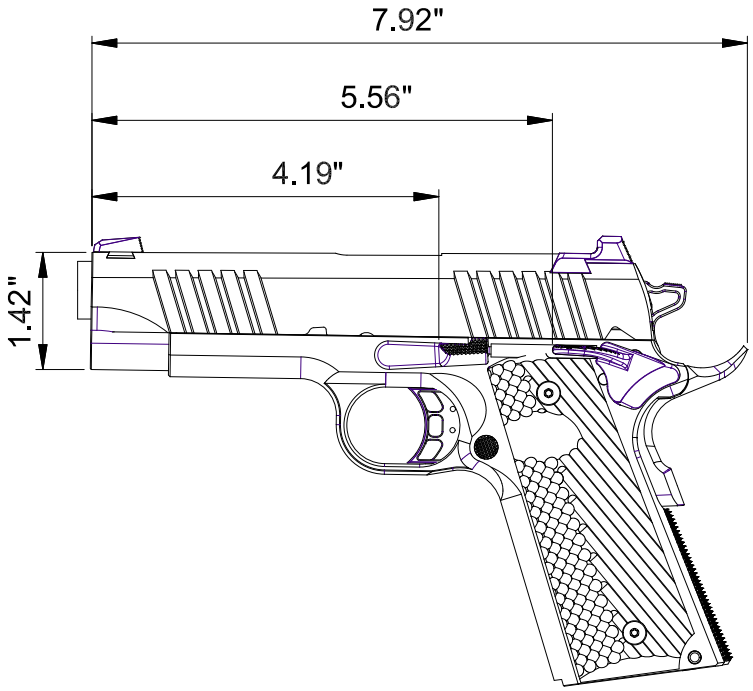

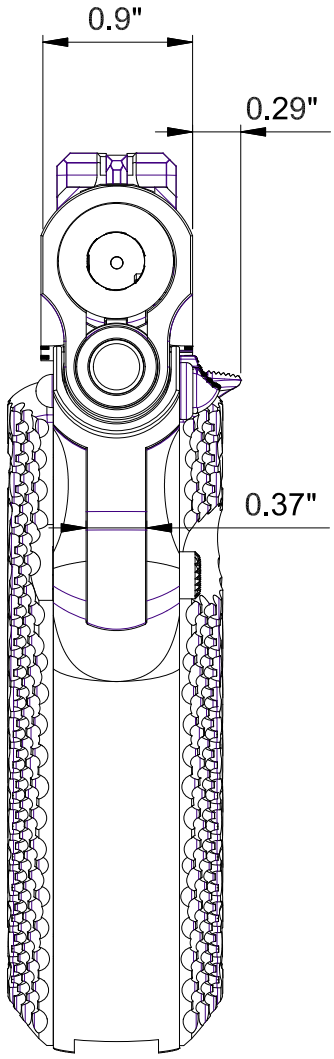

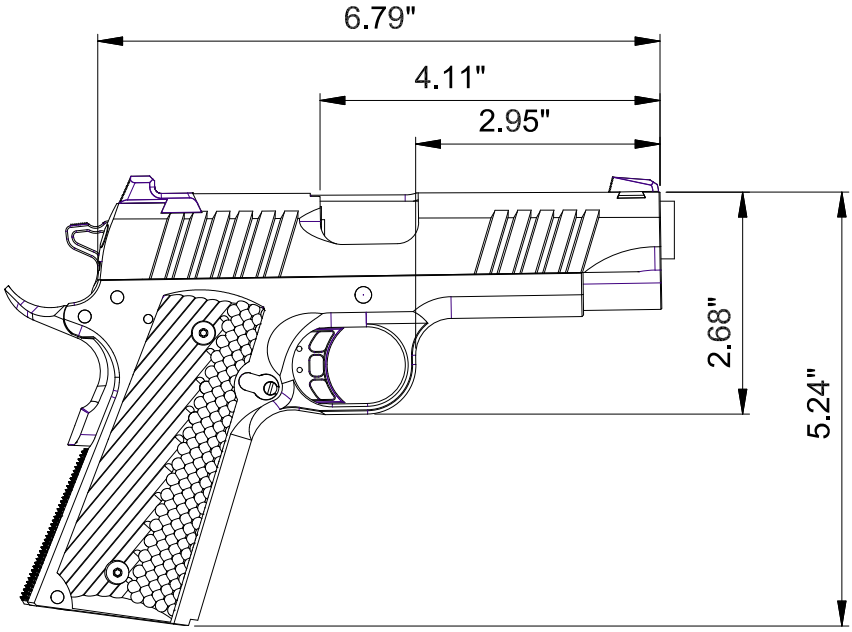

1911 ULTRA

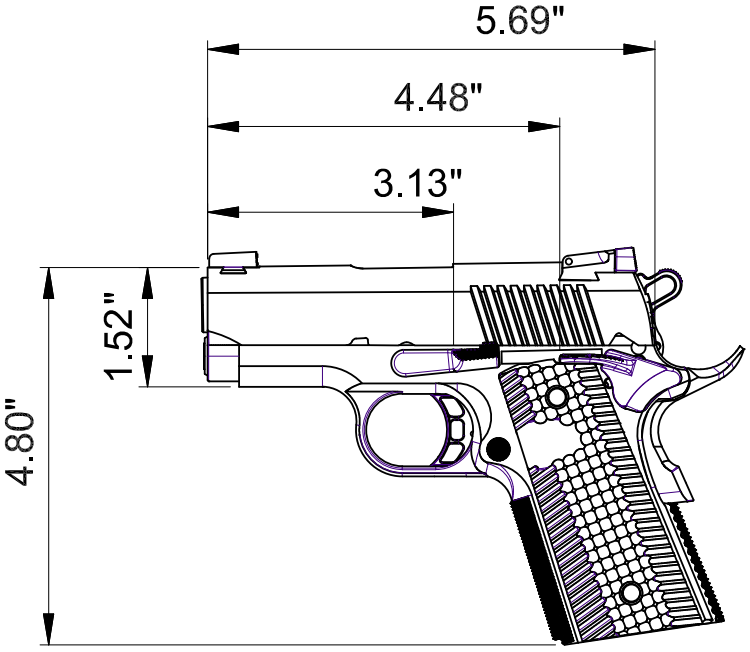

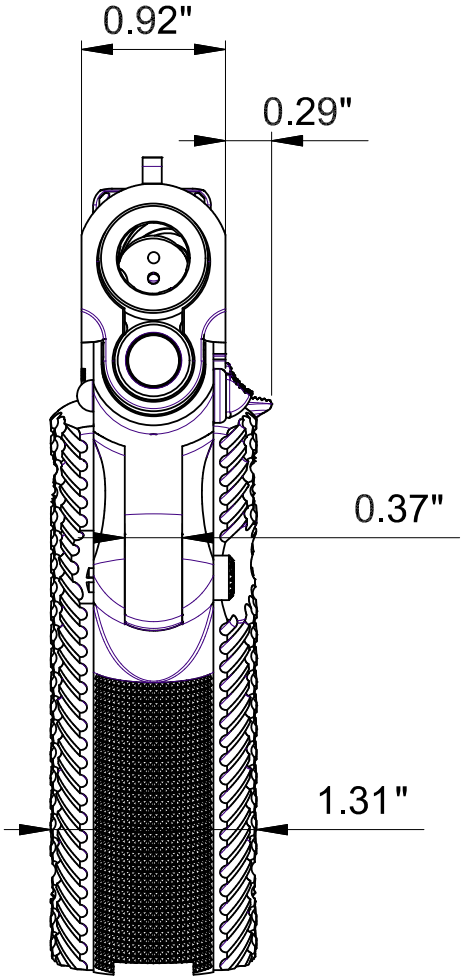

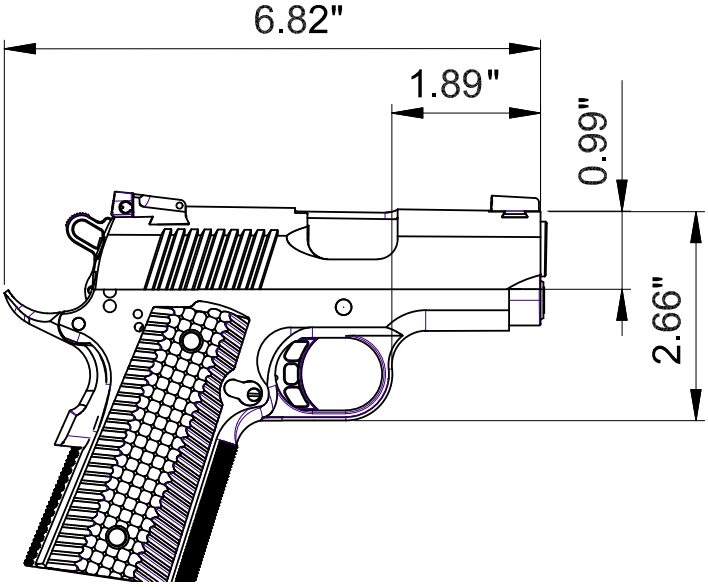

SAS2 BULLESTEROS

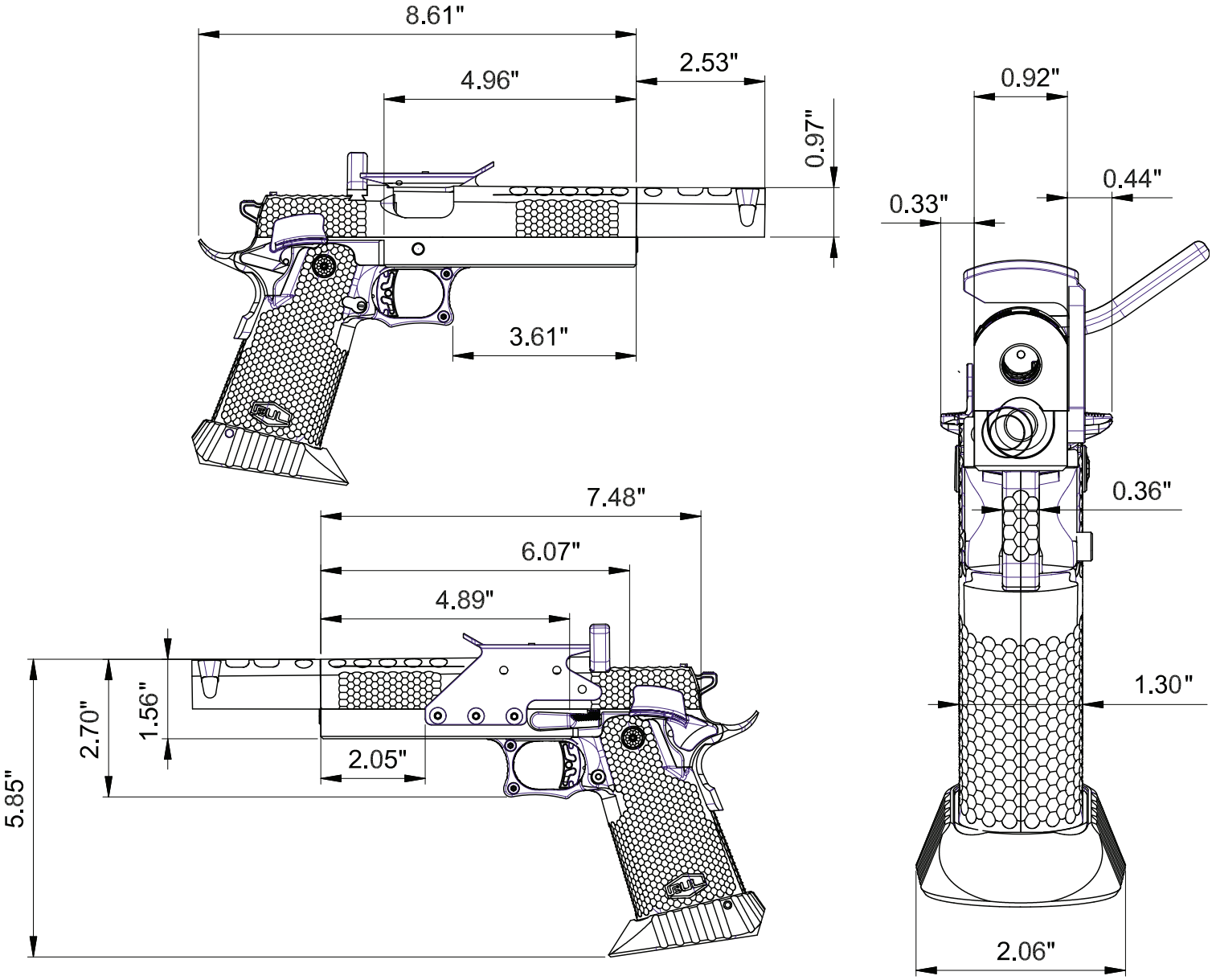

SAS2 UR

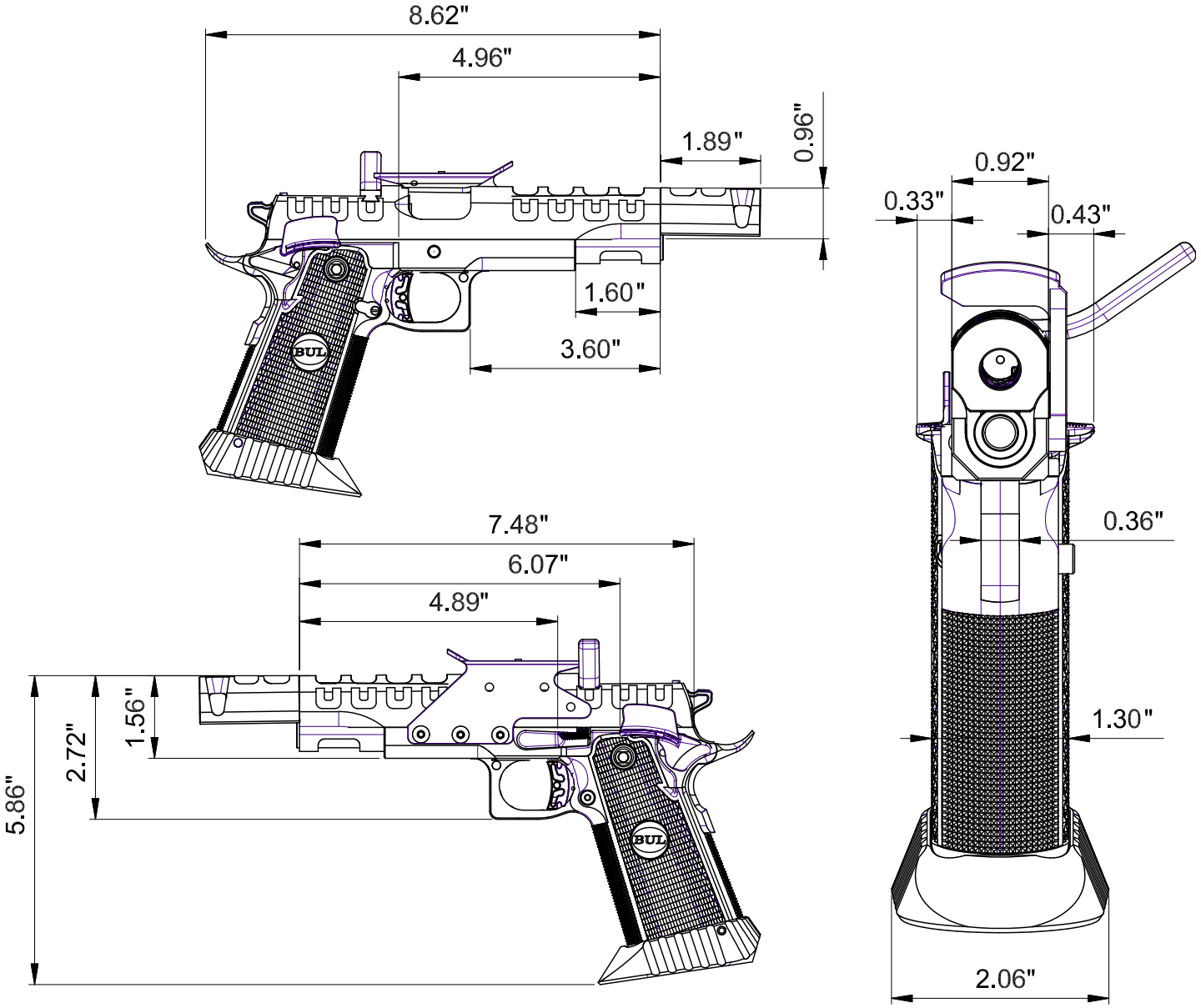
8.62"
4.96"
1.89"
0.96"
1.60"
3.60"
0.92"
0.33"
0.43"
0.36"
1.30"
2.06"
7.48"
6.07"
4.89"
1.56"
2.72"
5.86"

SAS2 UR-SHORTY

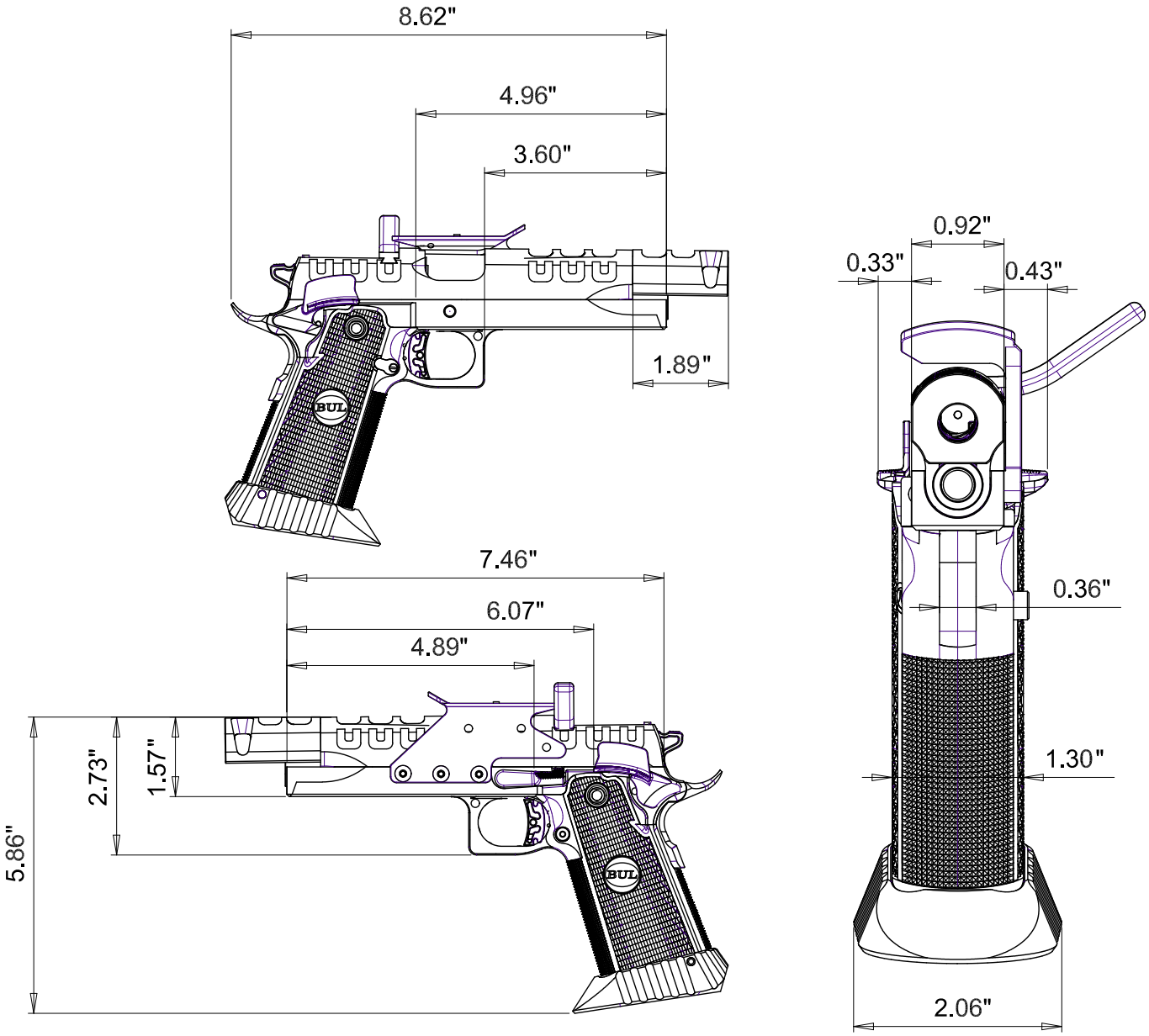

SAS2 SL

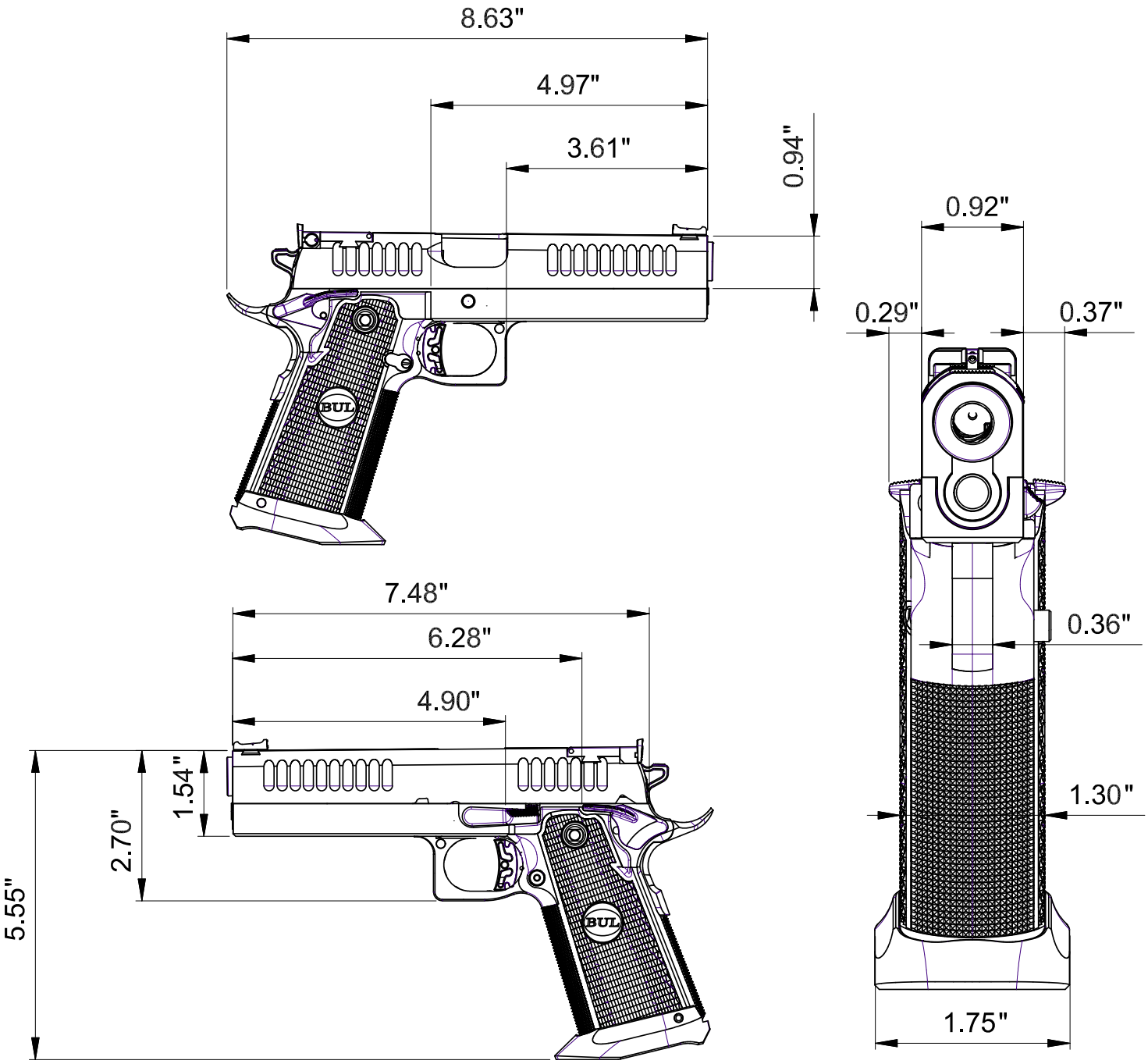

SAS2 SAW

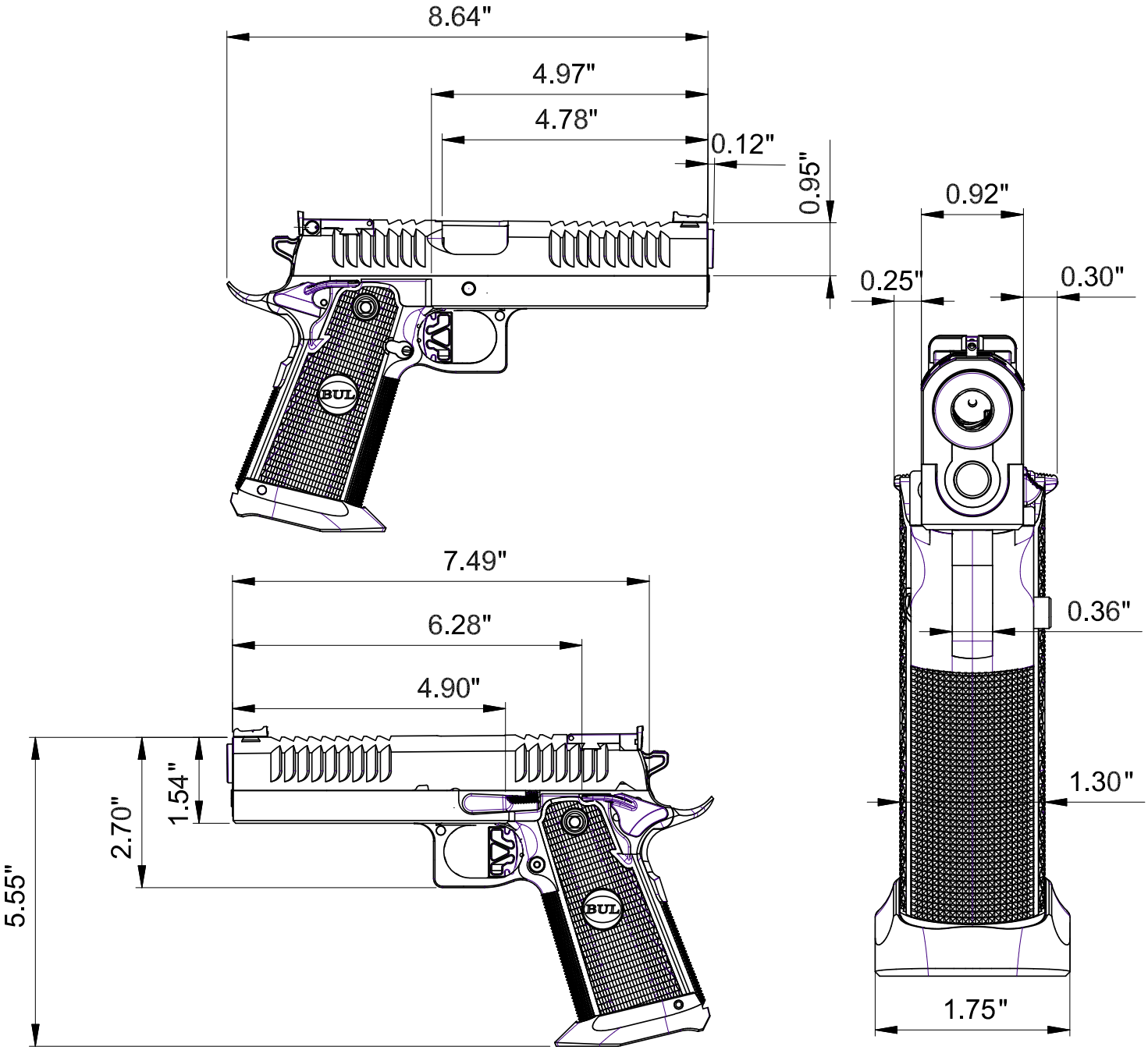
8.64"
4.97"
4.78"
0.12"
0.95"
0.92"
0.25"
0.30"
0.36"
1.30"
1.75"
7.49"
6.28"
4.90"
1.54"
2.70"
5.55"
BUL
BUL

SAS2 AIR

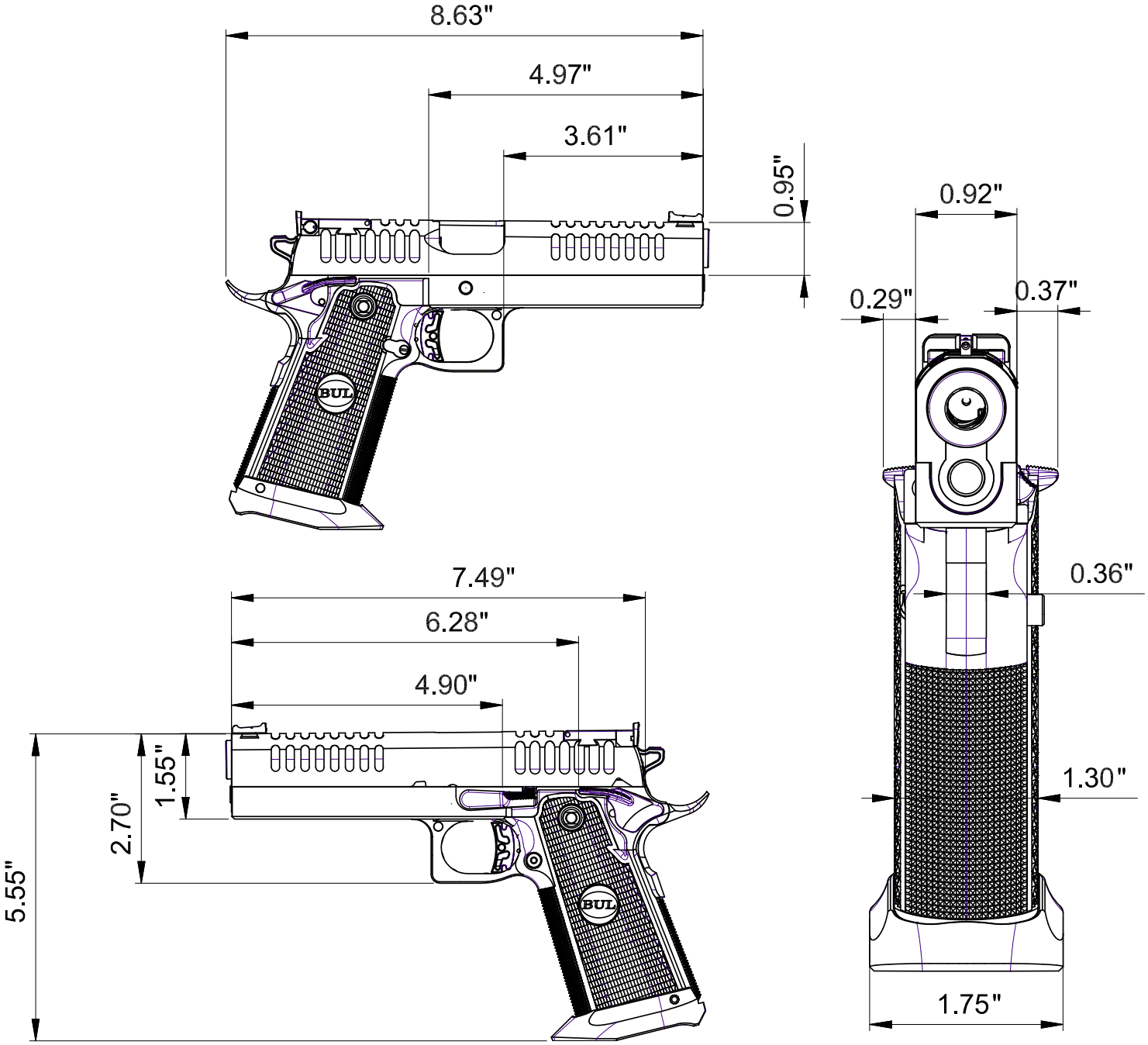
8.63"
4.97"
3.61"
0.95"
0.92"
0.29"
0.37"
0.36"
1.30"
1.75"
7.49"
6.28"
4.90"
1.55"
2.70"
5.55"
BUL
BUL

SAS2 RADICAL

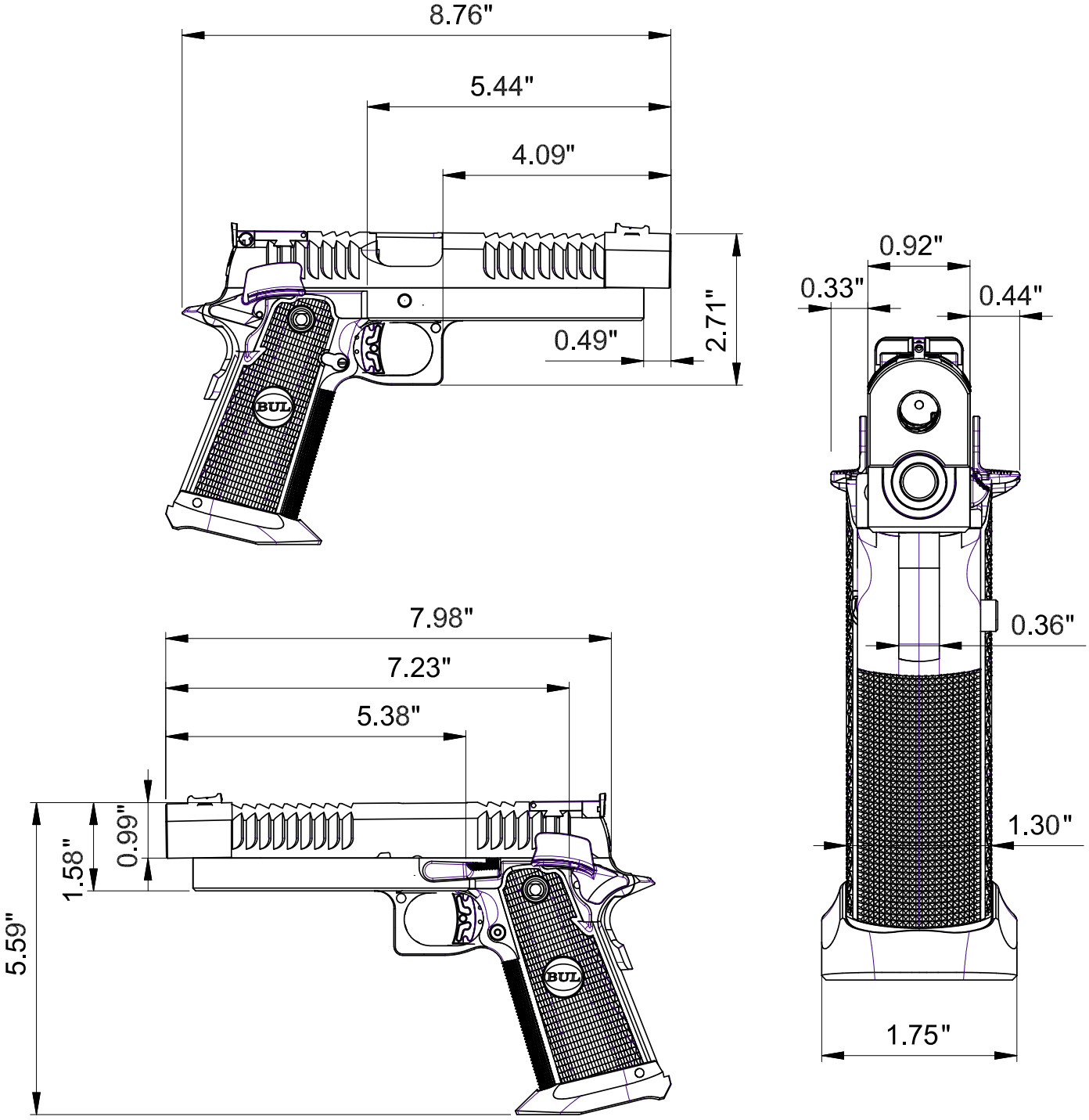

SAS2 TAC 4.25”

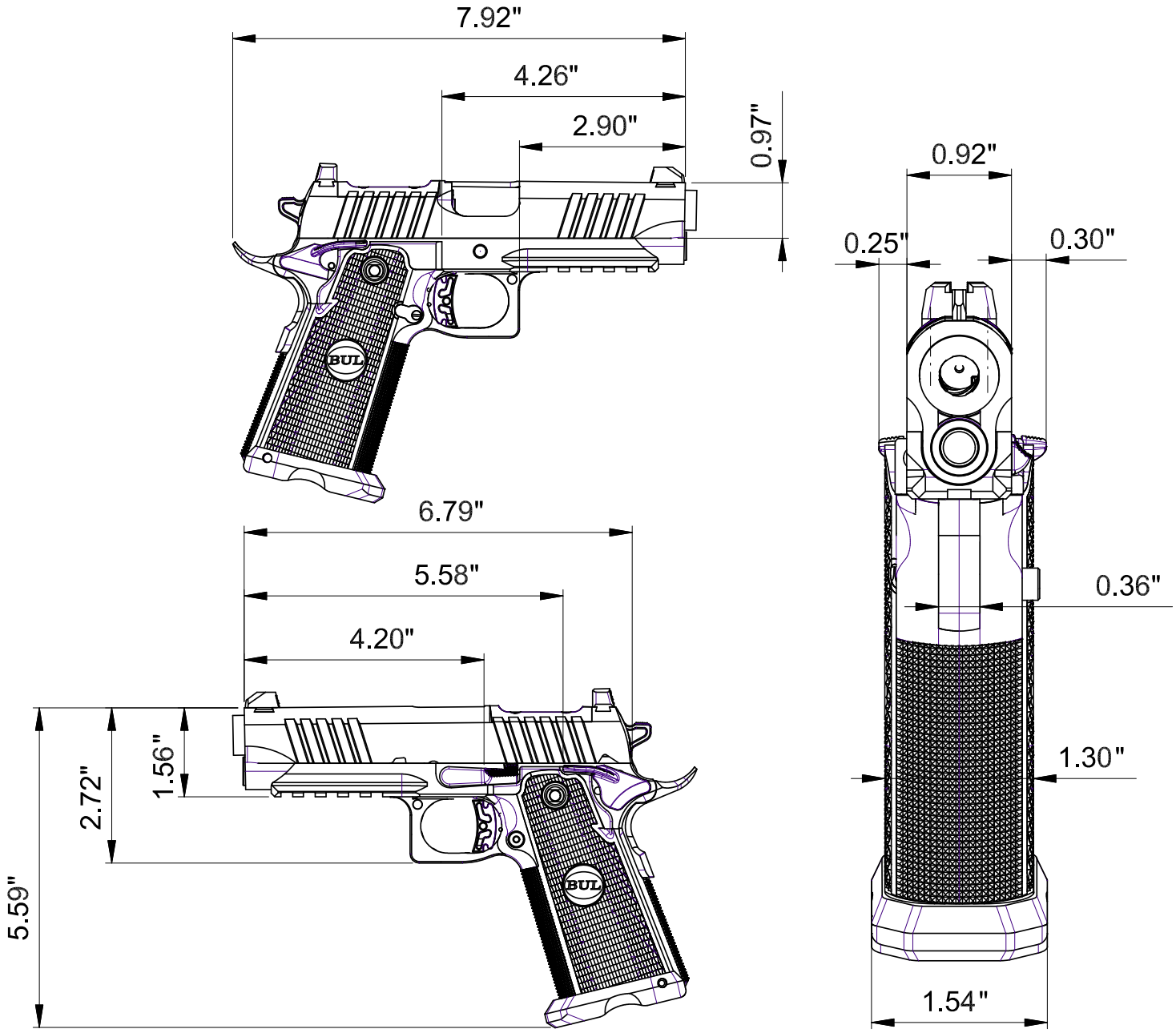

SAS2 TAC LIGHT 4.25”

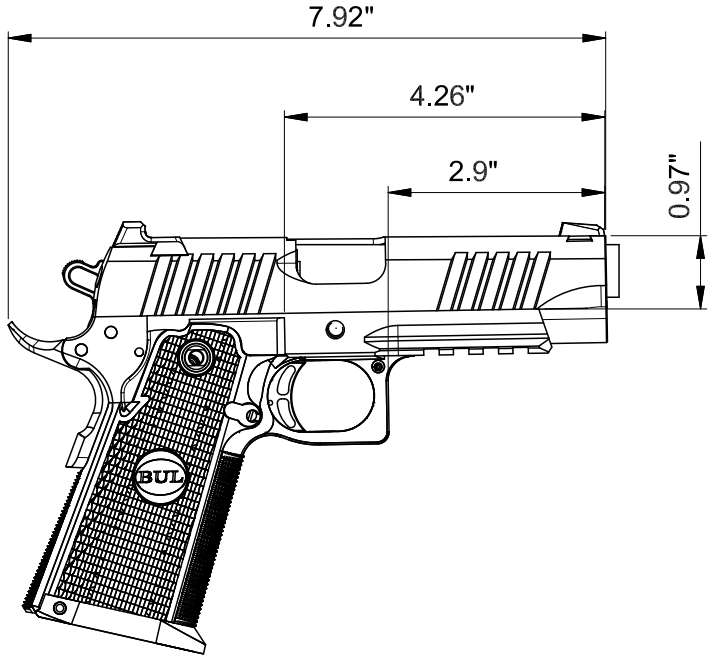

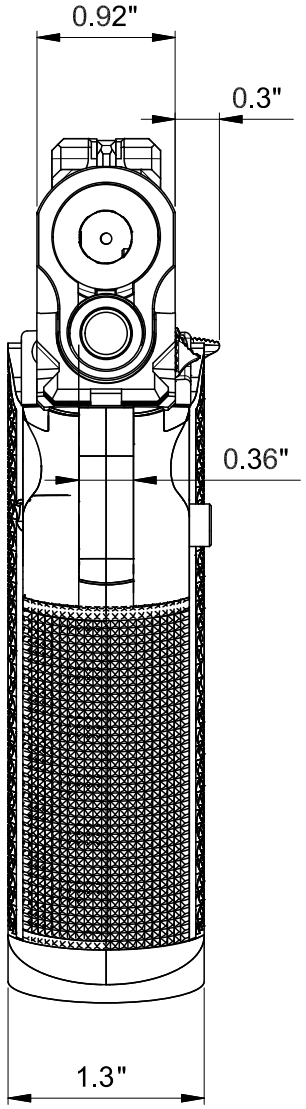

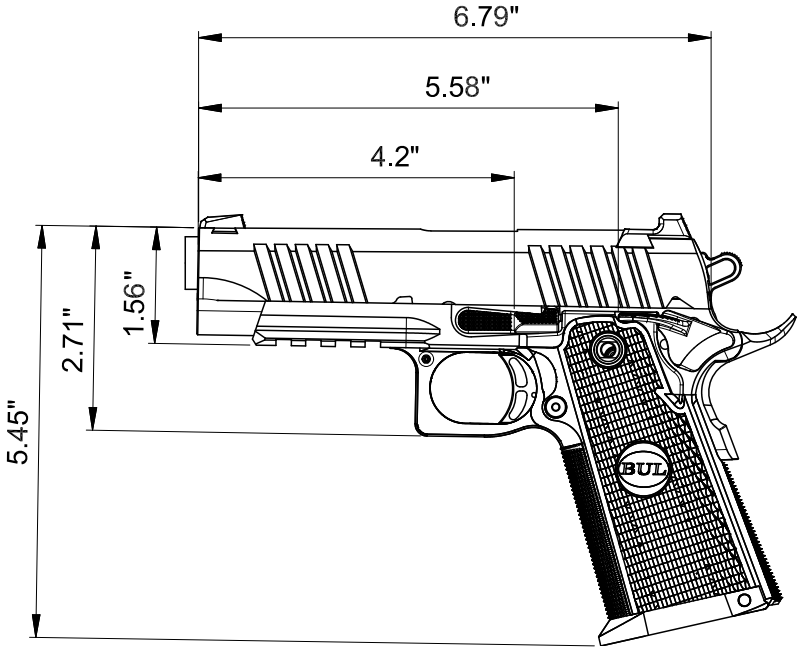

SAS2 TAC 5”

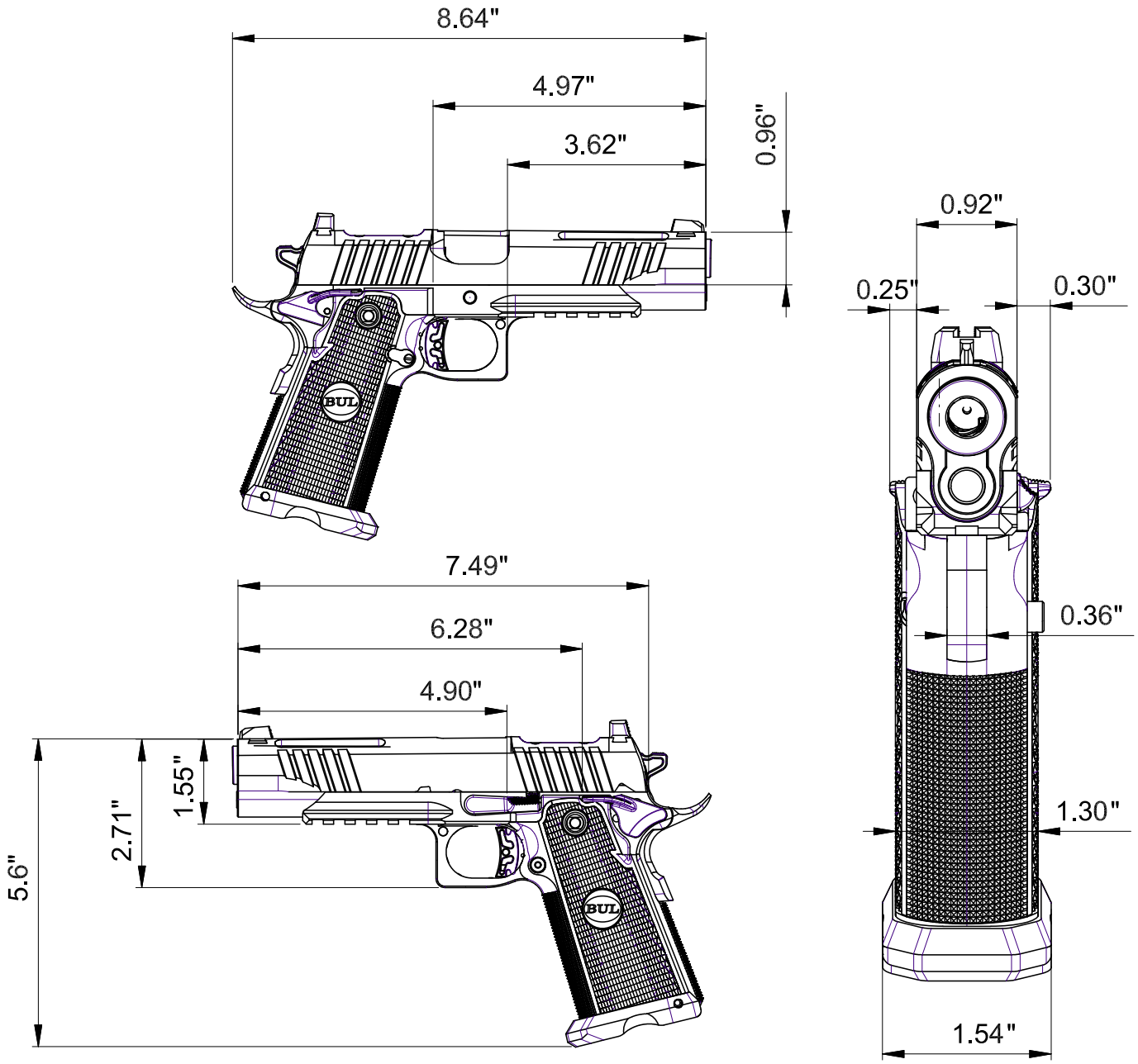

SAS2 ULTRALIGHT 3.25”

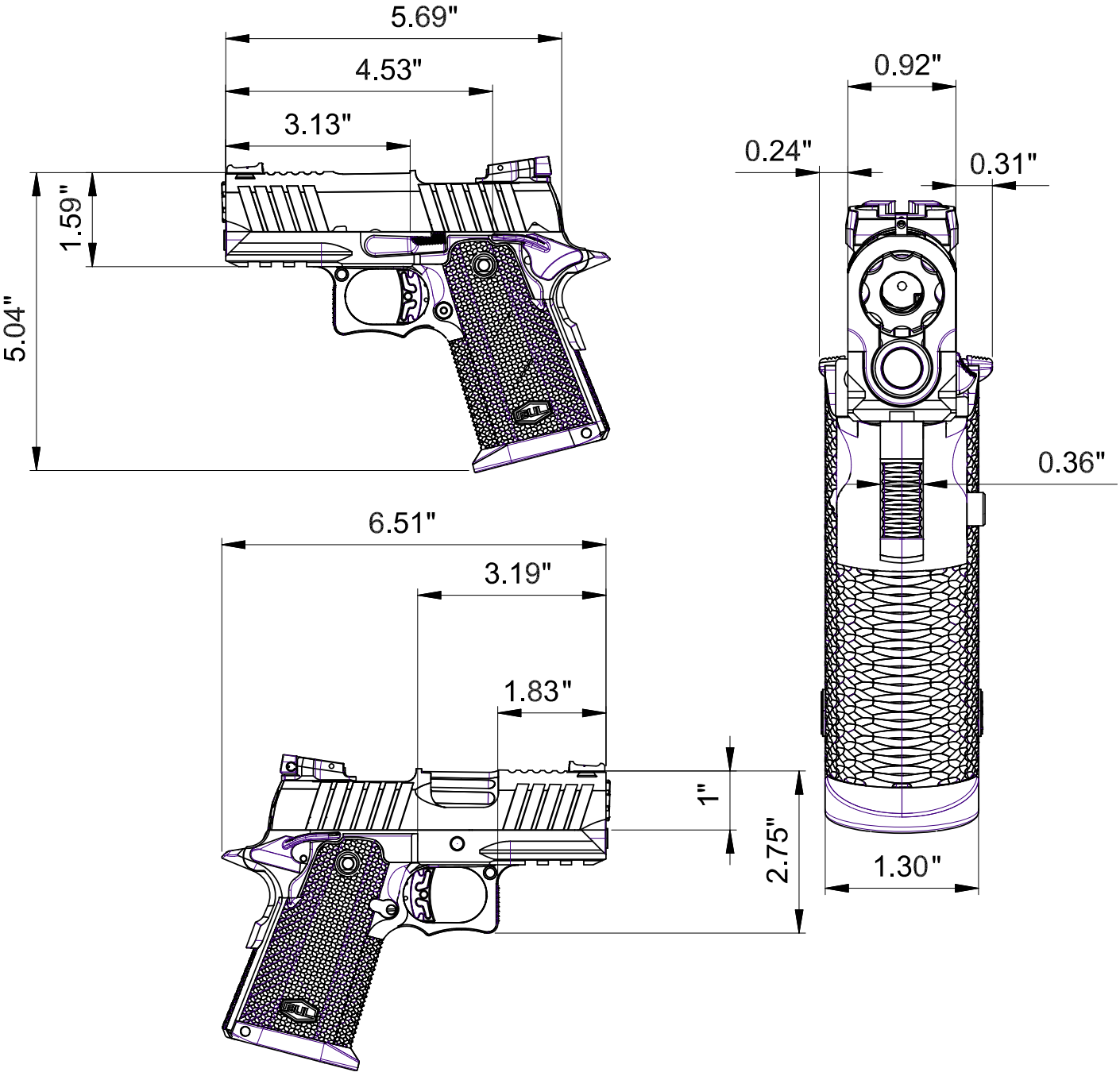

SAS2 ULTRALIGHT 3.25” COMP

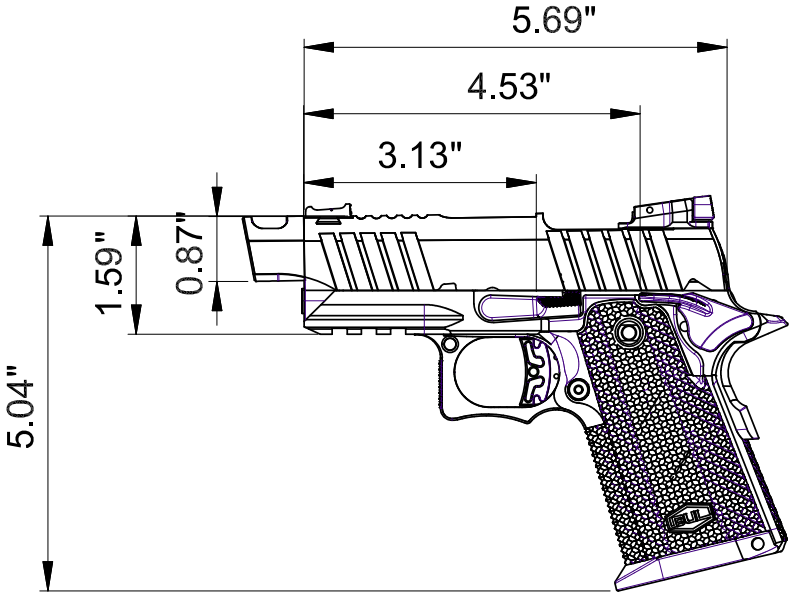

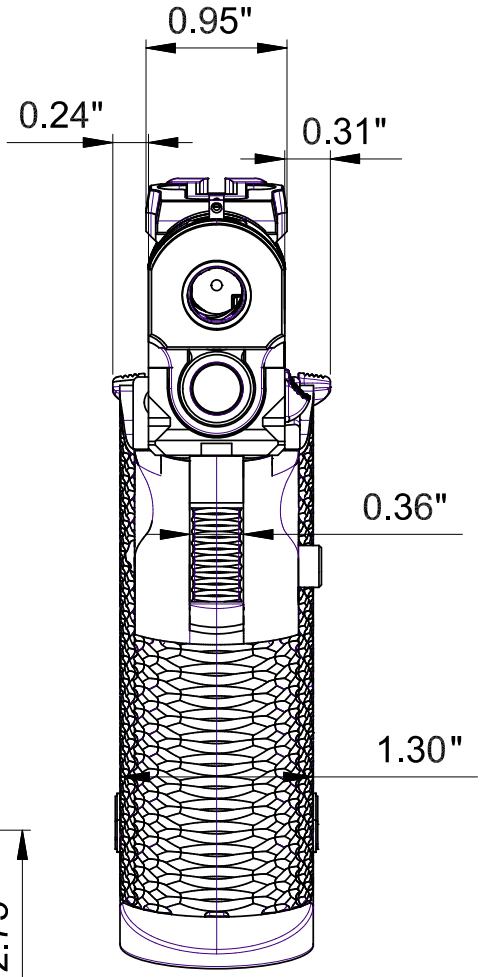

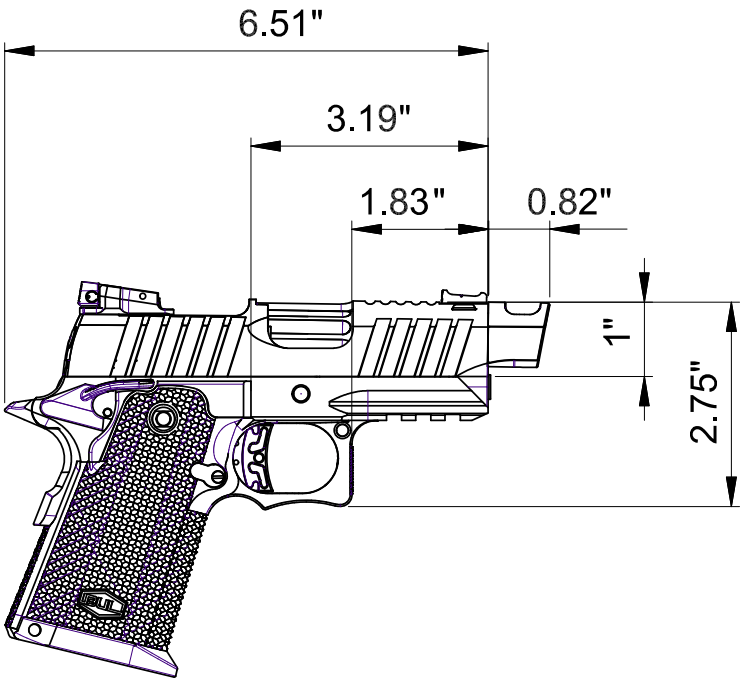

AXE C TOMAHAWK

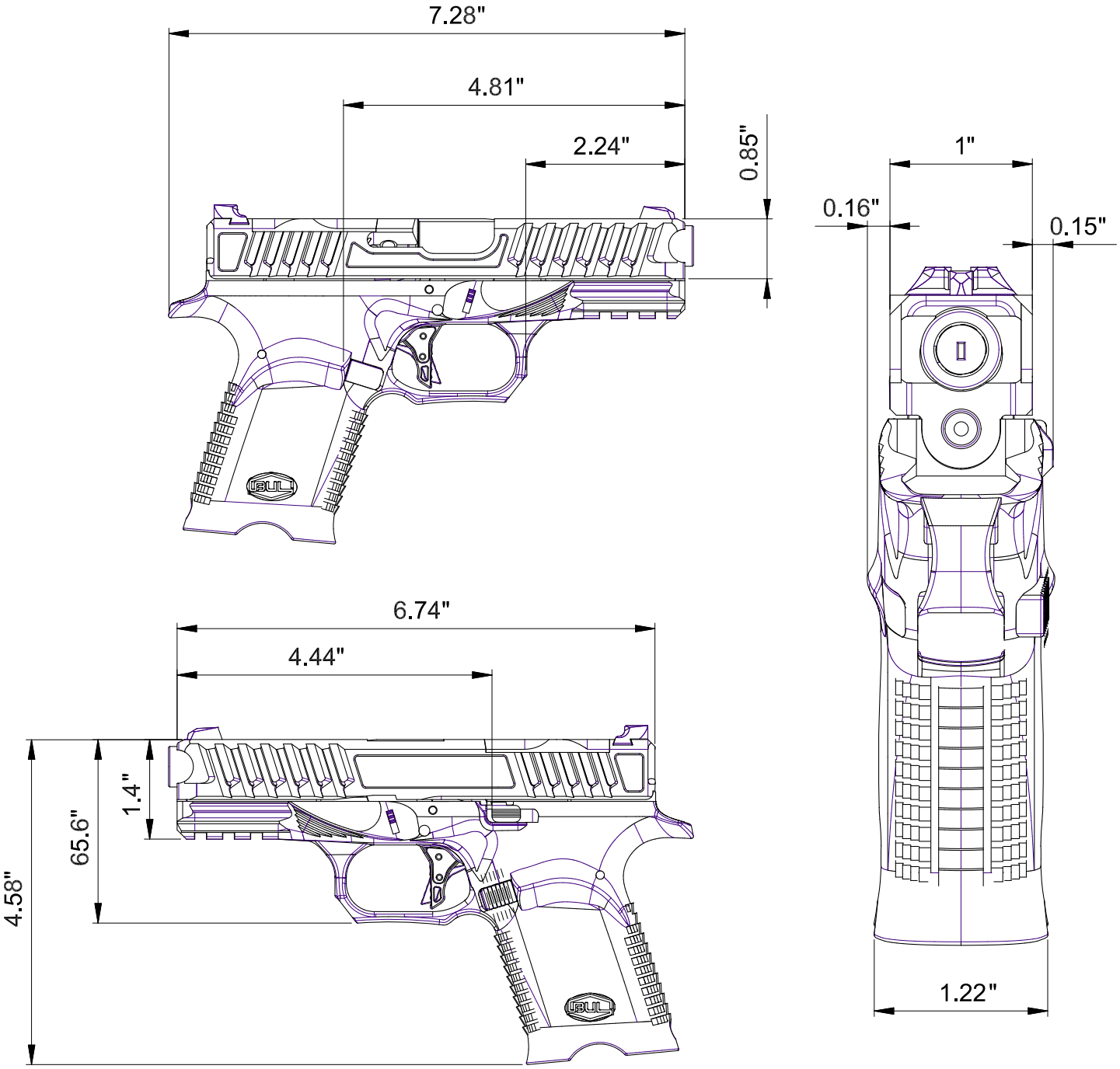

AXE C CLEAVER

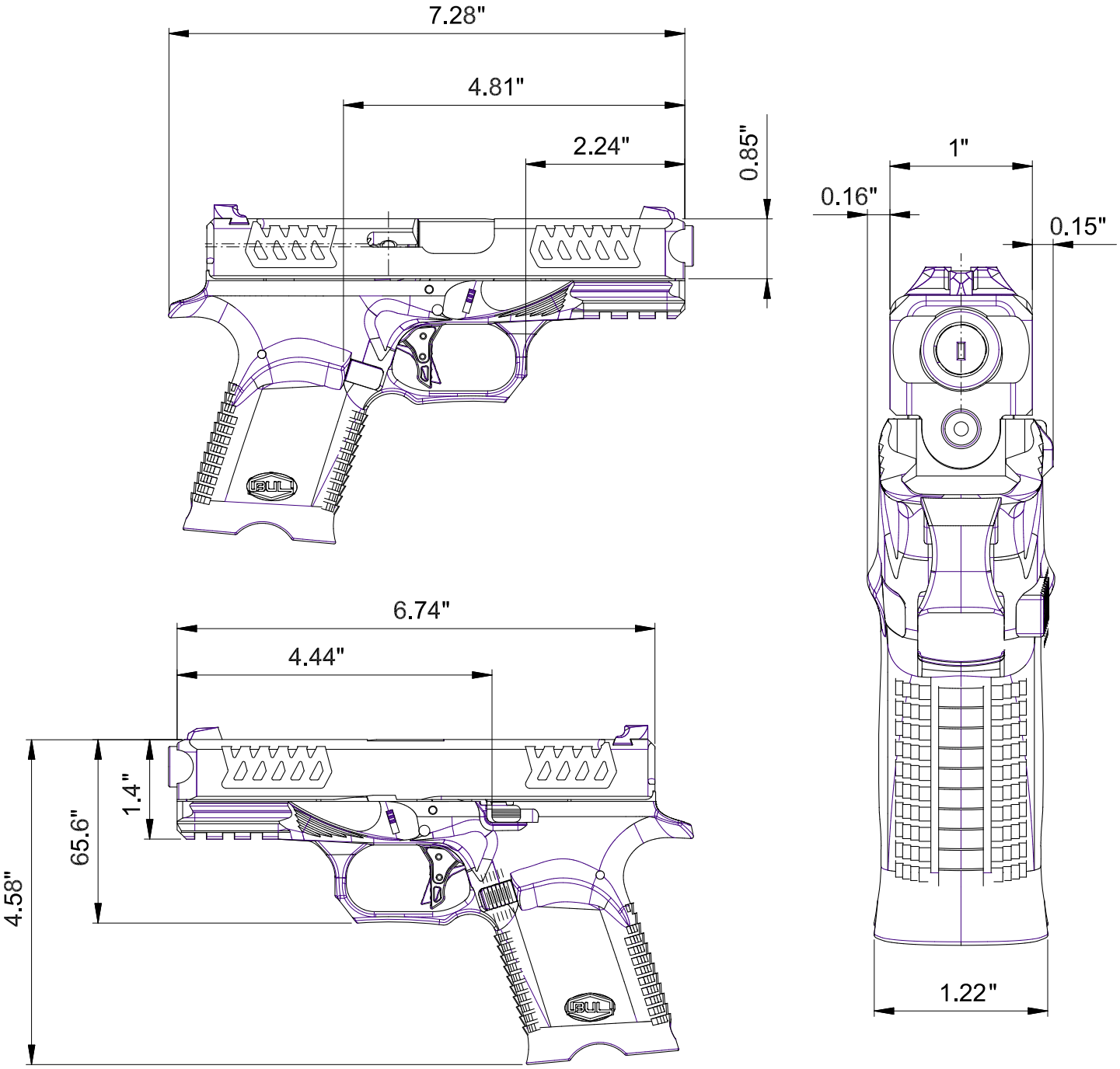

AXE C HATCHET

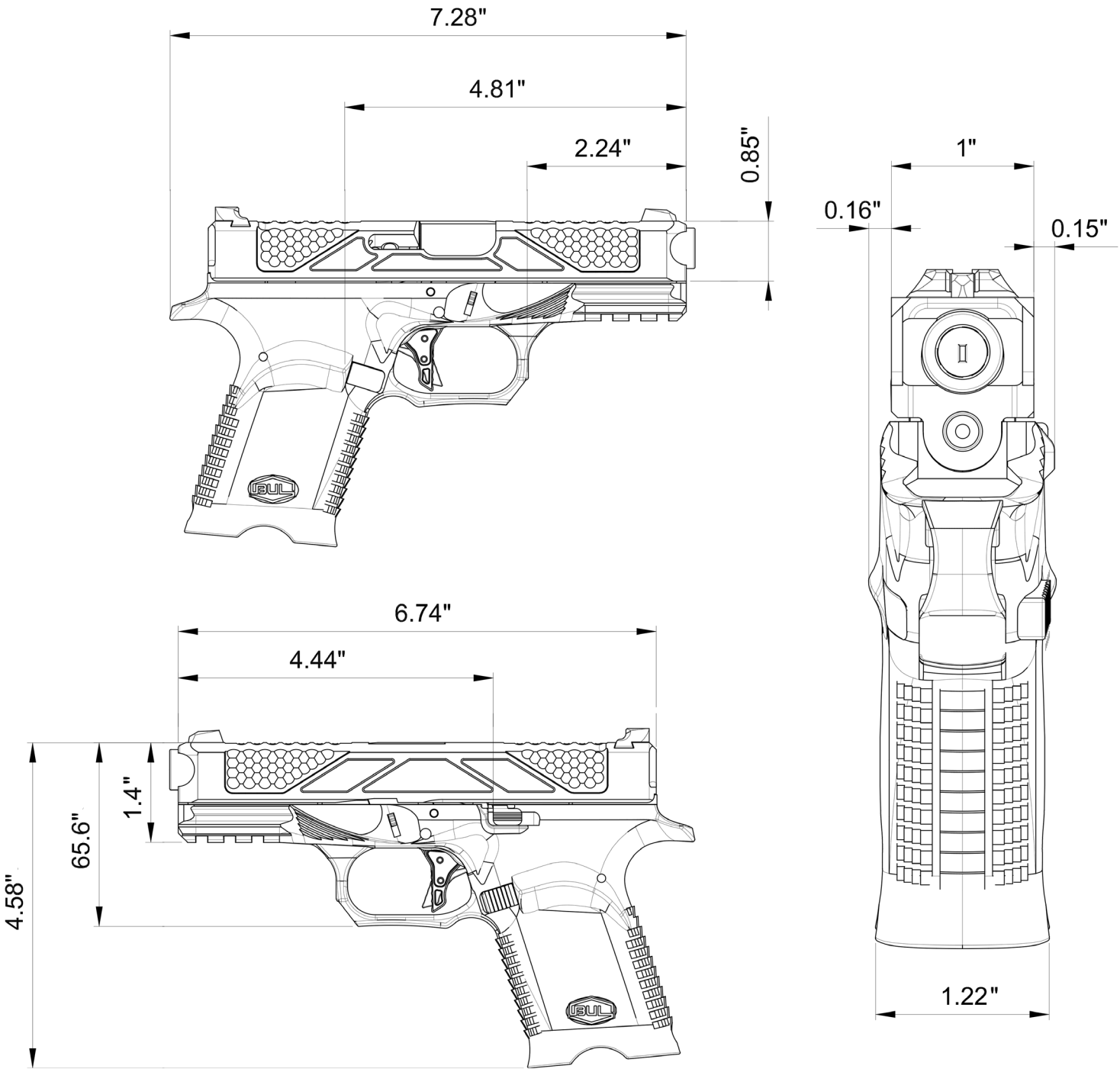

AXE FS CLEAVER

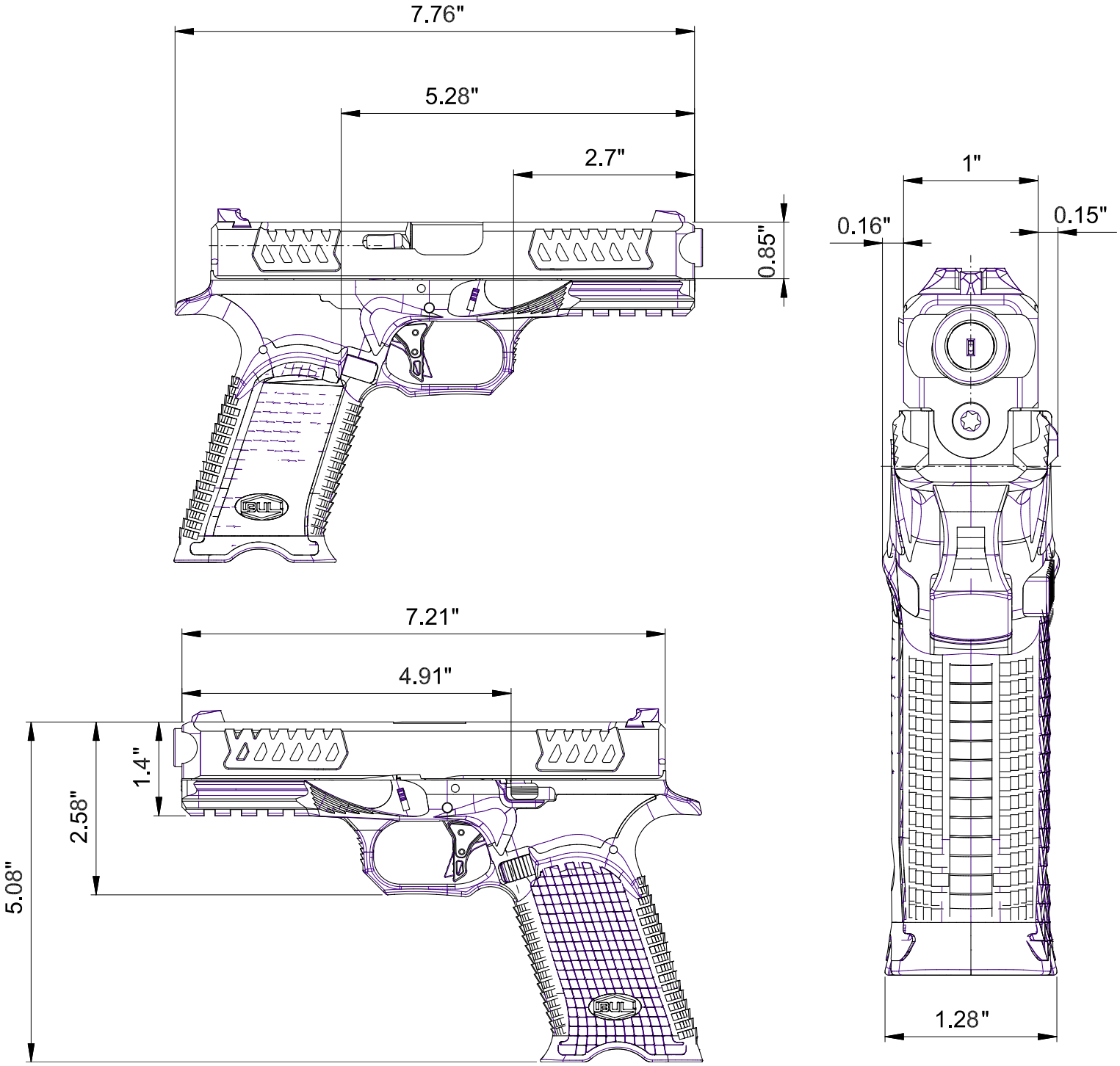

AXE FS TOMAHAWK

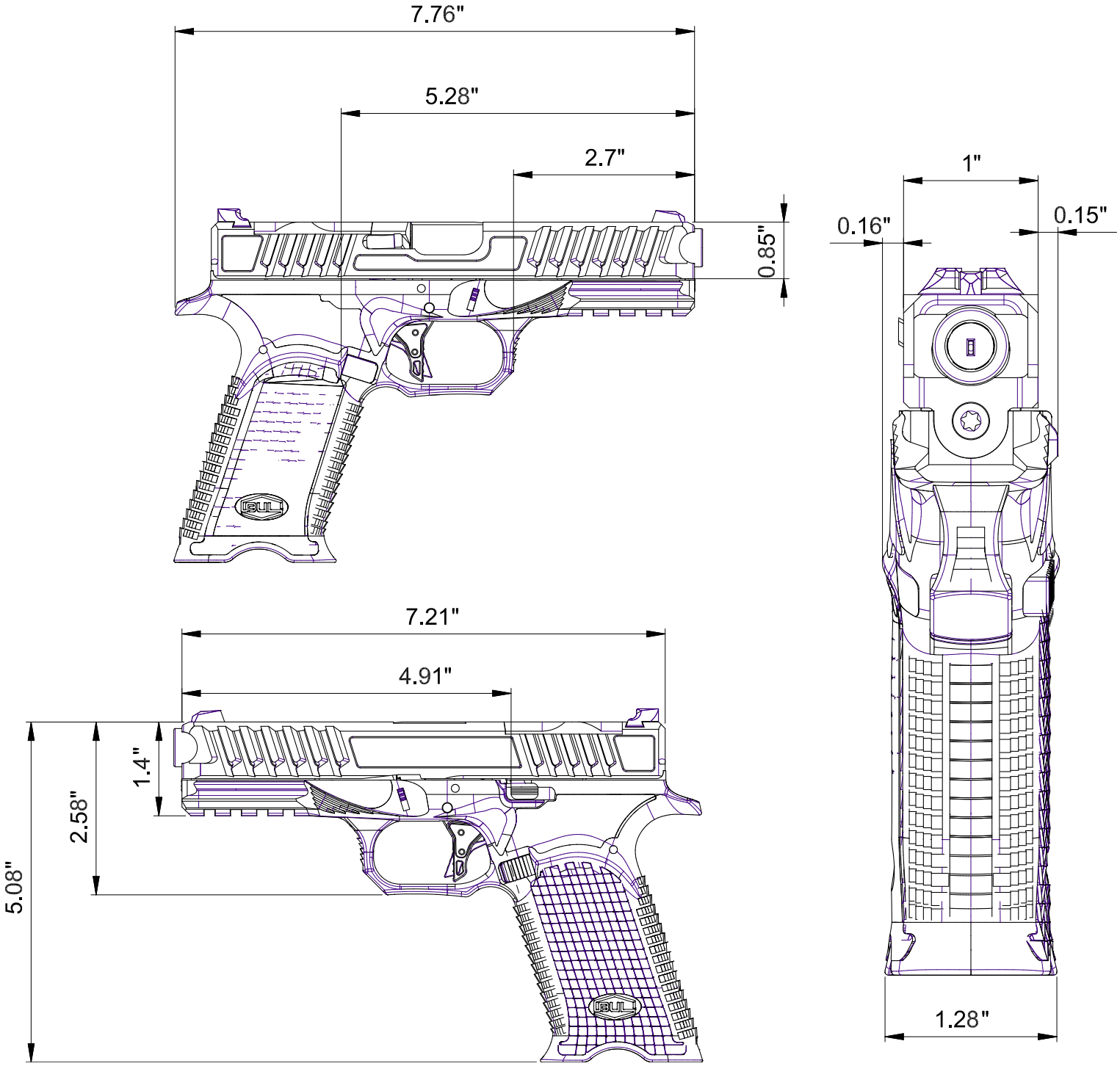
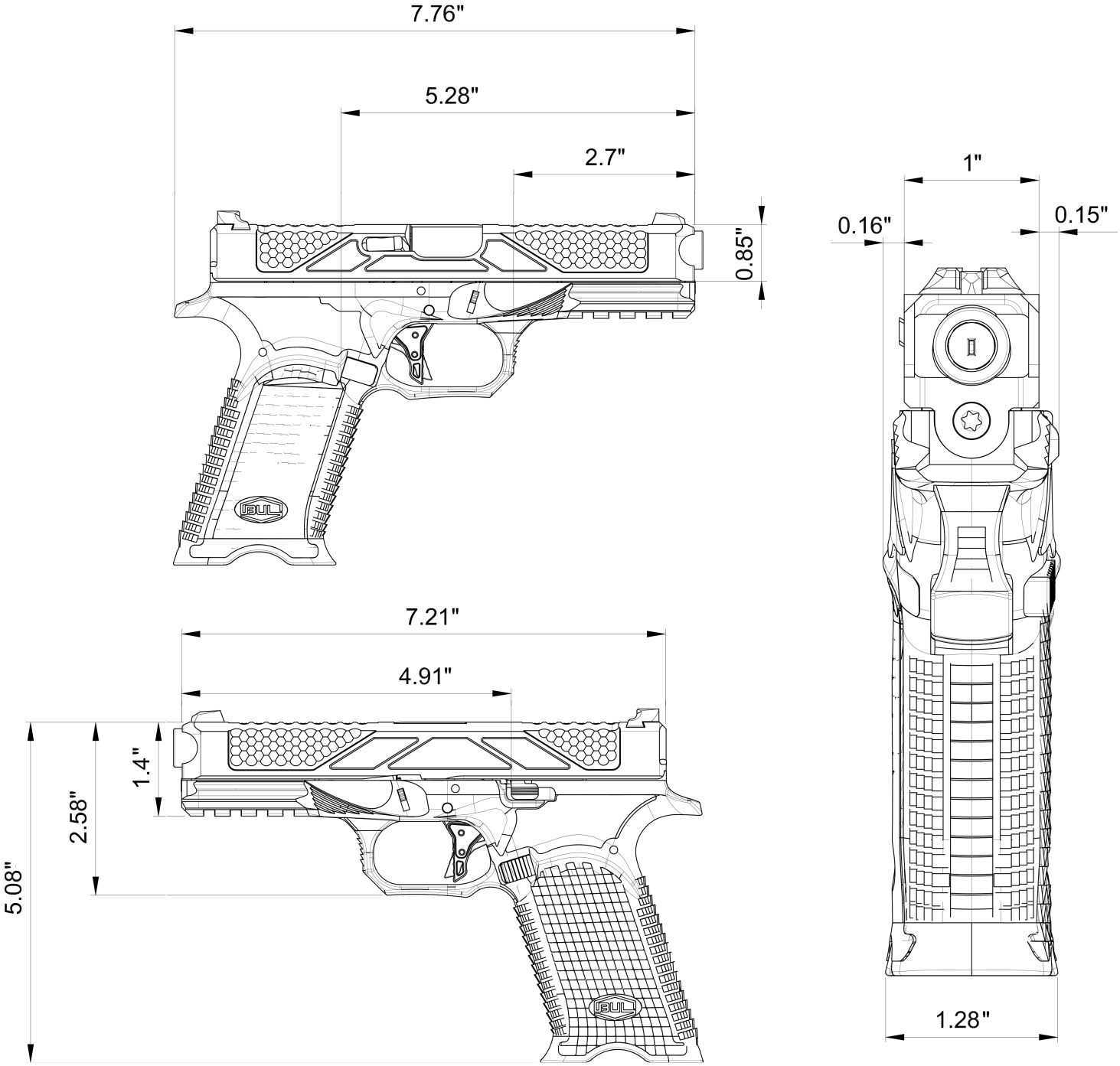
AXE FS HATCHET